LILLIPUT®

10.1"

Specific Monitor by LILLIPUT with Broadcast Quality for Full HD Camcorder
Application for CCTV Monitoring & Making Movies. Strongly recommend for directors!

CAMERA MONITOR

WITH 3G-SDI, HDMI & VGA INPUTS

FA1014/S

LUX AUTO BRIGHTNESS *(optional)*

A light sensor designed to detect ambient lighting conditions adjusts the panel's brightness automatically, which makes viewing more conveniently & saves more power.

- Integrated dustproof front panel
- 3G-SDI & HDMI in/outputs
- VGA, DVI & AV inputs
- High brightness: 350cd/m²
- High contrast: 800:1

HDMI® HIGH-DEFINITION MULTIMEDIA INTERFACE HDCP HIGH-BANDWIDTH DIGITAL CONTENT PROTECTION

APPEARANCE

OUTLINE DIMENSION

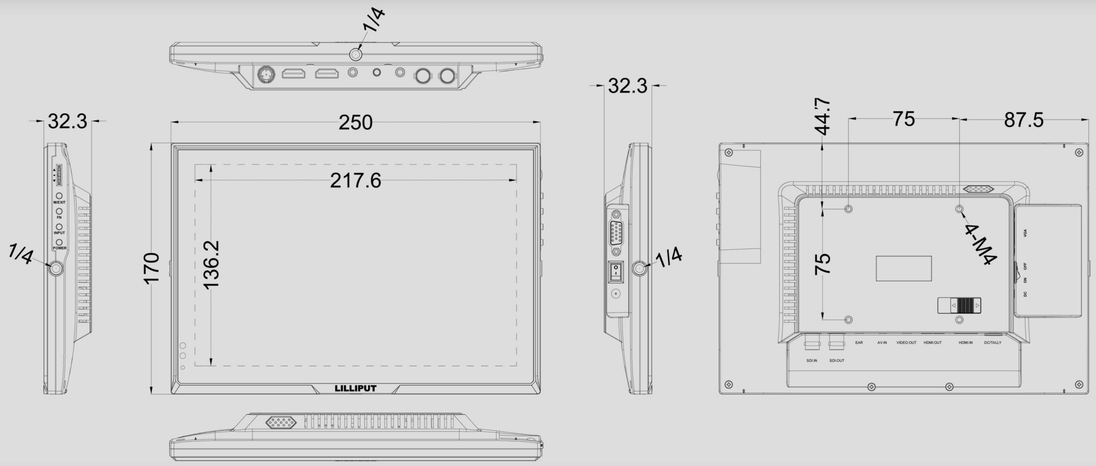

SPECIFICATIONS / ACCESSORIES

DISPLAY	Panel	10.1" LED IPS
	Physical Resolution	1280×800, support up to 1920×1080
	Aspect Ratio	16:9
	Brightness	350cd/m²
	Contrast	800:1
	Viewing Angle	170° / 170° (H/V)
INPUT	3G-SDI	1
	HDMI / DVI (optional)	1
	Composite	1
	Tally	1
	VGA	1
OUTPUT	3G-SDI	1
	HDMI (optional)	1
	VIDEO	1
AUDIO	Speaker	1
	Ear Phone Slot	1
SDI FORMAT	SMPTE-425M-A	1080p (60/59.94/50/30/29.97/25/24 /23.976/24sF) 1080i (60/59.94/50)
	SMPTE-274M	1080p (30/29.97/25/24/24sF/23.976) 1080i (60/59.94/50)
	SMPTE-296M	720p (60/59.94/50/30/25)
	SMPTE-125M	480i (60/59.94)
	ITU-R BT.656	576i (50)
POWER	Current	1000mA
	Input Voltage	DC 7-24V
	Battery Plate	V-mount / Anton Bauer mount / F970 / QM91D / DU21 / LP-E6
	Power Consumption	≤12W
ENVIRONMENT	Operating Temperature	0℃~50℃
	Storage Temperature	-20℃~60℃
DIMENSION	Dimension (LWD)	250×170×32.3mm
	Weight	660g

1. Gimbal bracket	1 piece
2. VESA battery plate	1 piece
3. Battery plate (F-970, QM91D, DU21 or LP-E6)	2 pieces
4. HDMI A/C cable	1 piece
5. Mini XLR & TALLY cable	1 piece
6. Composite cable	1 piece
7. Video output cable	1 piece
8. Shoe mount	1 piece
9. Mount plate bracket	1 piece
10. 12V DC adapter	1 piece
11. Remote control	1 piece
12. HDMI to DVI cable (optional)	1 piece
13. V-mount / Anton Bauer mount (optional)	1 piece
14. VGA cable (optional)	1 piece
15. VESA folding bracket (optional)	1 piece
16. Li-ion battery (optional)	1 piece

Note: Due to constant effort to improve products and product features, specifications may change without notice.

WWW.LILLIPUT.COM

ZHANGZHOU LILLIPUT ELECTRONIC TECHNOLOGY CO., LTD.
Add：Zong Si Road, Lan Tian Economic Development Zone, Zhang Zhou, Fu Jian, 363005, China
Tel: +86-596-2109661/2109323
Fax: +86-596-2109611 Email: sales@lilliput.com